HYUNDAI
POWER PRODUCTS

GASOLINE INVERTER GENERATOR
(Low voltage generating set)

HG4000I-AR1

GENUINE PRODUCT OF
HYUNDAI CORPORATION

ORIGINAL INSTRUCTIONS

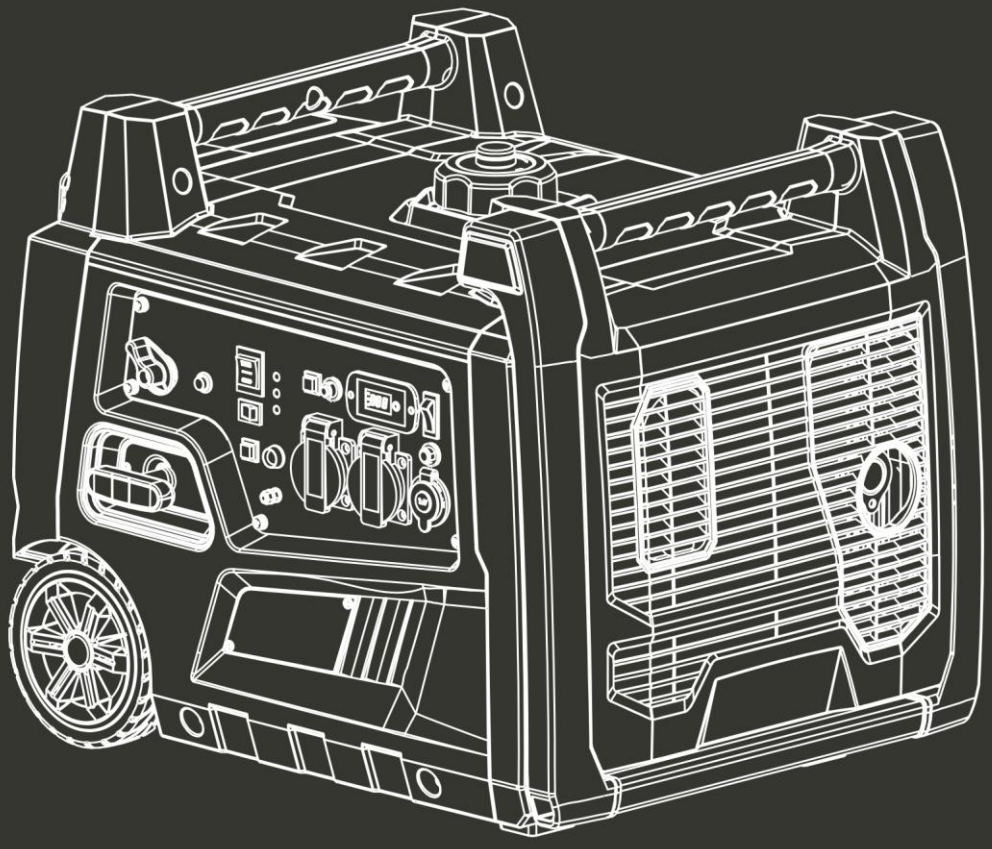

Warning: please read this instructions carefully before using this machine!

1. SAFETY INSTRUCTIONS

IMPORTANT –

Please fully read and understand this instruction manual before operating the device.

1. SAFETY INSTRUCTION

Warning:

1. Attention! Exhaust gases are toxic. Do not operate the generator in a room without ventilation system!
2. Children should be protected by keeping them at a safe distance from the generator set!
3. Refilling of the generating sets are not allowed during the operation!
4. If the generator will be mounted in a closed room, relevant safety regulations against fire and explosion should be followed!
5. Do not connect to household circuit!
6. Do not use in wet condition!
7. Keep in flammable away!
8. When refuelling:
   - **a)** stop engine;
   - **b)** no smoking;
   - **c)** do not spill.

General security instructions

- The operator must know the principles of functioning and the structure of the generator and the motor. He must know how to stop the motor in case of urgency and how to manipulate the controls.
- Never let children use this device.
- Never let people who do not know these instructions use this device. Local regulations may impose restrictions on the age of the user.
- Please do not use this device when people, especially children, or pets are nearby. Direct them away from the working area.
- The operator or the user are responsible for possible accidents or damage to other persons or to their property.
- Do not wear loose clothing or jewellery as this can get caught in the machinery as it runs.
- Use safety equipment. Wear protective gear such as an anti-dust mask, non-slip safety shoes, a helmet or hearing protection.
- Stay vigilant, watch what you are doing and show good sense when you use the generator. Do not use if you are tired or under the influence of drugs, alcohol or medicines.
- Install the generator in a place that is well ventilated and make sure that there is at least 1.5 metres between the generator and the walls of the building or other equipment. Do not place flammable liquids or gases near the generator.
- Do not run the generator in an enclosed or badly-ventilated space. The exhaust gas from the motor contains carbon monoxide which is toxic and may lead to a loss of consciousness or death.
- Run the generator in respect of the power indicated in the user's manual. Do not run the generator with an overload or at excessive speed.
- The silencer of the generator becomes extremely hot when the motor runs or even for a time after it has stopped. Do not touch it as it will burn you.
- Do not transport or move the generator until it has cooled down.
- Perform periodic maintenance and resolve problems that appear immediately. Do not run the generator before correcting any fault detected.
- The generator uses a system of air-cooling, and it is necessary to clean its components regularly, including the grilles, the cover of the fan and the fan itself so as to ensure cooling.
- Keep the fuel filter clean, and change the oil of the motor regularly.
- Periodically check the installation of the connections and the tightness of the fixations, re-tightening them if necessary.
- Clean the components of the air filter periodically, and replace the air filter when necessary.
- Remove any electrical equipment that is plugged in before starting or stopping the generator.
- Before transporting the generator, you must empty the fuel tank.

- Maintenance and repair of the generator must be carried out by a qualified technician from an authorised after-sales service centre.

Warning: when you start the generator with the cord, watch out for sudden changes in the rotation of the motor!!! Risk of wounding!!! Never cover the generator when it is running. The cut-out mounted on the generator has the aime of reducing the risk of electric shock. If it needs to be replaced with another cut-out, the latter must correspond to the technical specifications of the generator. Due to important mechanical constraints, it is necessary to use a flexible sheathed cable with a strong rubber protective layer (conforming to IEC 245-4) or a similar cable. If using an electrical extension cable, the total length of the extension must not exceed 60m when the section of the wire is 1.5mm^2 and must not exceed 100m when the section of the wire is 2.5mm^2.

Additional requirements for low-power generating sets for use by laymen

- Protect children by keeping them at a safe distance from the generating set.
- Fuel is combustible and easily ignited. Do not refuel during operation. Do not refuel while smoking or near naked flames. Do not spill fuel.
- Some parts of the internal combustion engine are hot and may cause burns. Pay attention to the warnings on the generating set.
- Engine exhaust gases are toxic. Do not operate the generating set in unventilated rooms. When installed in ventilated rooms, additional requirements for fire and explosion protection shall be observed.
- Before use, the generating set and its electrical equipment (including lines and plug connections) should be checked to ensure that they are not defective.
- Protection against electrical shock depends on circuit breakers specially matched to the generating set. If the circuit breakers require replacement, they should be replaced with a circuit breaker having identical ratings and performances characteristics.
- Due to high mechanical stresses, only tough rubber-sheathed flexible cable (in accordance with IEC 60245-4) or the equivalent should be used.
- The user shall conform to regulations of electrical safety applicable to the place where the generating sets are used.
- The user must respect the requirements and precautions in the case of resupply by generating sets of an installation, depending on existing protective measures in this installation and applicable regulations.
- Generating sets should only be loaded up to their rated power under the rated ambient conditions.
- Prior to commencing maintenance work it shall be ensured that untimely start-up is not possible.

Security measures when filling the fuel tank

- The fuel is extremely flammable and poisonous.
- This generator only uses petrol (gasoline); any other kind of fuel will damage the motor.
- Do not overfill the tank with petrol to avoid spilling. If you notice a spill, it must be wiped up completely with a dry cloth before starting the motor.
- If you swallow fuel by mistake, if you inhale fuel vapours or if you get drops of fuel in your eyes, see a doctor immediately. If a certain quantity of fuel is spilt on your skin or clothing, wash or change your clothes.
- Always stop the motor of the generator when filling it with fuel.
- Never fill the fuel tank while smoking or near a naked flame.
- Make sure you don’t spill fuel on the motor and the exhaust grille of the generator during filling with fuel.
- Keep the fuel in an appropriate recipient and sheltered from any sources of fire.
- Carry out filling in a safe place, and slowly open the fuel cap to release the pressure which has built up inside the tank. Wipe up any drops of petrol that have spilled before starting the motor.
- To prevent fire, move the generator at least 4 metres away from the area for filling with fuel.
- Make sure that the fuel cap is tightly closed before starting.
- Do not keep petrol in the tank for a long time.
-  While using or transporting the generator, make sure you keep the generator upright, otherwise the fuel may escape from the carburettor or the fuel tank.

 **Electrical safety**

Before each use ensure that the load to be connected does not exceed the power of the current produced by the generator.

To avoid electric shock, you must follow the following instructions:

- Do not touch the generator with wet hands.
- Do not run the generator under rain or snow.
- Do not run the generator near water.
- Connect the generator to earth. Use a sufficiently thick conductor for the earth wire.
- Do not operate the generator in parallel with another generator.
- If using electrical extensions, make sure that they are sufficiently thick to transport the current and that they are used correctly.


The connection of a generator used for auxiliary power to the electrical installation of a building must be performed by a qualified electrician, and in conformity to the provisions of the applicable laws and norms in the field of electricity. Incorrect connections will cause leakage of the current from the generator into the lines of the public electricity company. Such leakage could electrocute the workers of the public electricity company working on the network or other persons in contact with the line during a power cut. Also, when the public power supply is re-established, the generator can explode, catch fire or generate fires in the building's electrical installation.


Before connecting electrical devices to the generator, make sure that their voltage specifications and frequency of functioning correspond to the technical characteristics of the generator. There may be damage if the device connected is not designed to function with a voltage tolerance of +/- 10% or a frequency tolerance of +/- 3 % compared with those of the generator.

Protection of the environment

- You must periodically check the silencer (Before doing this, switch off the generator and let it cool completely). A damaged silencer increases noise.
- Do not throw motor oil into the drains but deposit it at a collection point set up for that purpose.
- The fuel for this machine is combustible and explosive. After stopping the machine, you must handle the remaining fuel correctly and meet local environmental requirements.
- To dispose of residual fluids, proceed as follows:
  - ♣ Close the fuel tap
  - ♣ Drain fuel from the fuel tank
  - ♣ Empty carburettor fuel

2. SYMBOLS

The following symbols are used in this manual to allow differentiating different types of information. The safety symbol is used as a keyword to warn you of potential hazards in operating and owning power equipment.

Observe all safety instructions to avoid or limit the risk of serious injury or even death.


This is the safety alert symbol. It is used to warn you of a risk of injury and material damage. Observe all safety messages following this symbol to avoid possible injury or death or material damage.


In order to reduce the risk of injury and material damage, the user should read and understand this manual before using this product.


Running the electric generator in a closed room is forbidden, as the exhaust gas emissions may lead men or animals to coma and death.


This symbol indicates that the surface is very hot and should not be touched. Be careful not to touch the crankcase and exhaust muffler of the engine.


The engine and exhaust grid become hot after a certain amount of time the engine is running. When servicing or repairing prior to complete cooling, be sure to avoid contact of your skin or clothes with the engine and exhaust grid.



No open flames.



Do not connect to the electricity system.



Do not dispose of old appliances with household waste.



This equipment complies with the European standards and directives.



Guaranteed noise emission level.



This symbol indicates the surface is very hot and not touching



Exhaust emissions are harmful to health of body



No naked fire near the machine!



Danger ! Electrical shock !

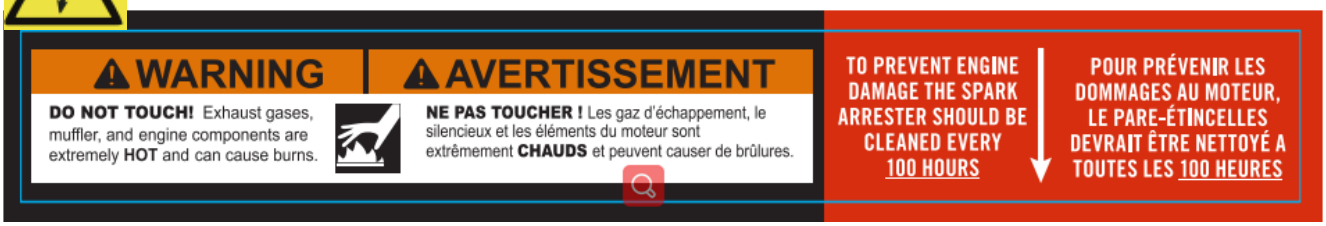

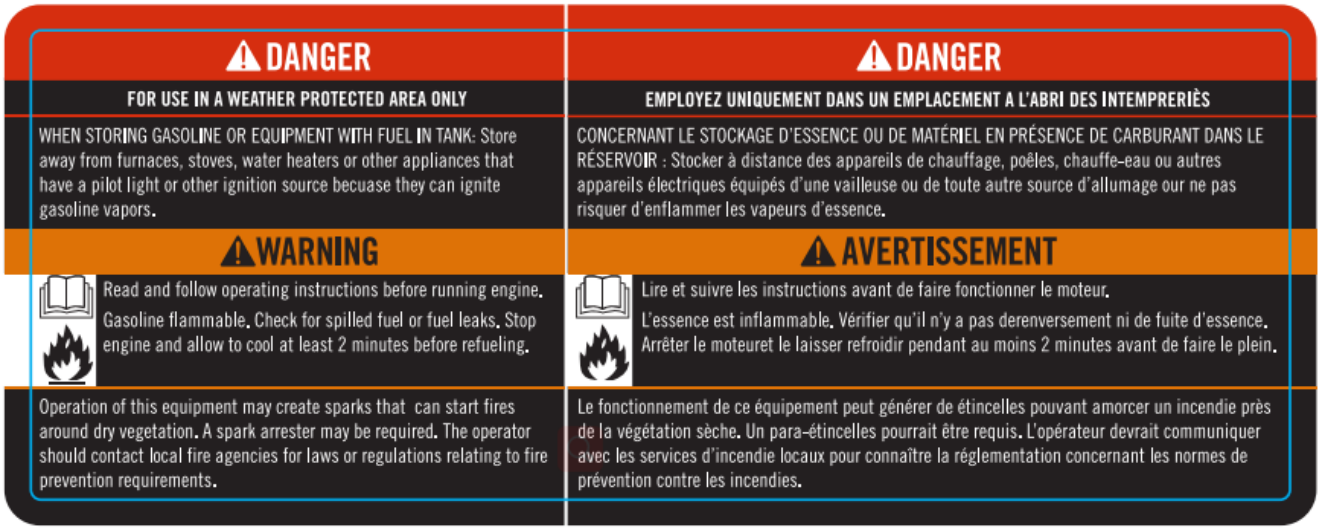



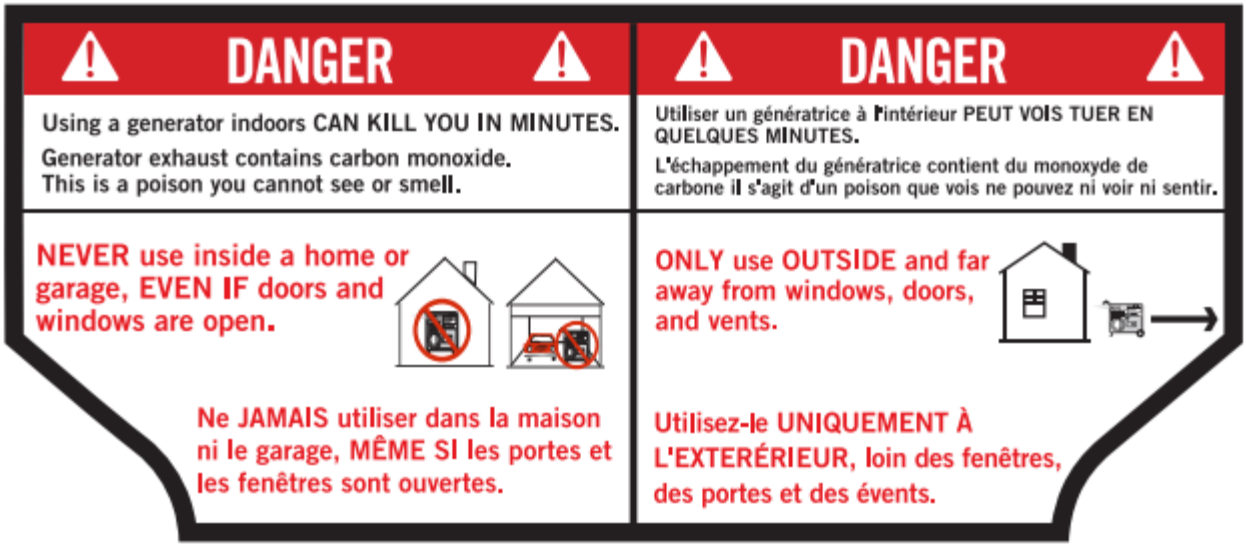



3. CONTROLS AND FEATURES

Read this manual before starting the generator. Familiarise yourself with the location and function of the various controls and features. Keep this manual for future reference.

Generator

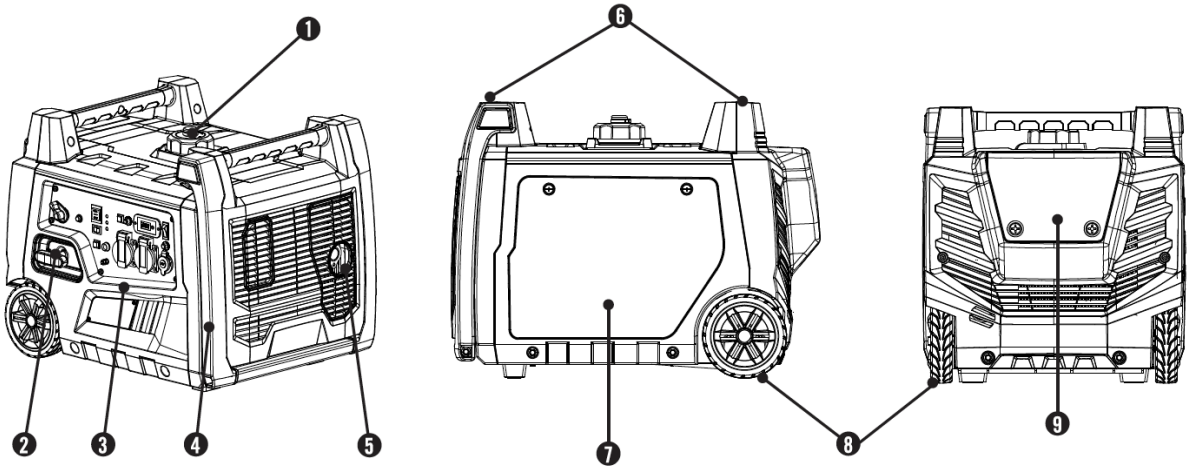

(1) Tank cap – Remove to add fuel. **(2) Manual start** – Used to start the engine. **(3) Power supply panel** **(4) Folding handle** – Do not use the folding handle to lift or carry the unit.	**(5) Muffler** **(6) Managing handle** **(7) Maintenance cover** **(8) Wheels** **(9) Battery access cover**

Parts included

Your HG4000i-AR1 power generator comes with the following parts: 1. Battery Charger (2.1A and 1A 12 Volt Ports)……. 1 2. Remote-control …… 1 3. Oil funnel …… 1 4. Spark plug spanner ……. 1	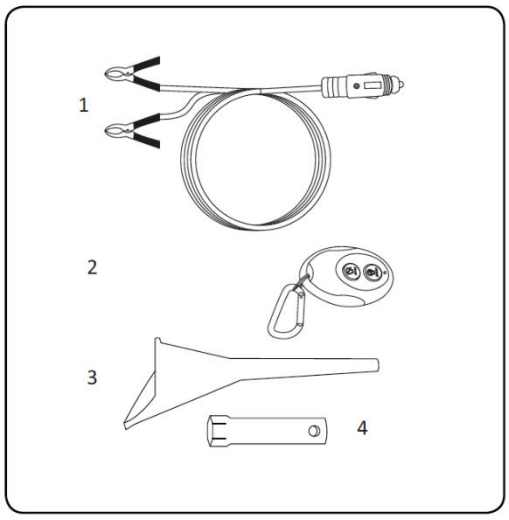

Electrical panel

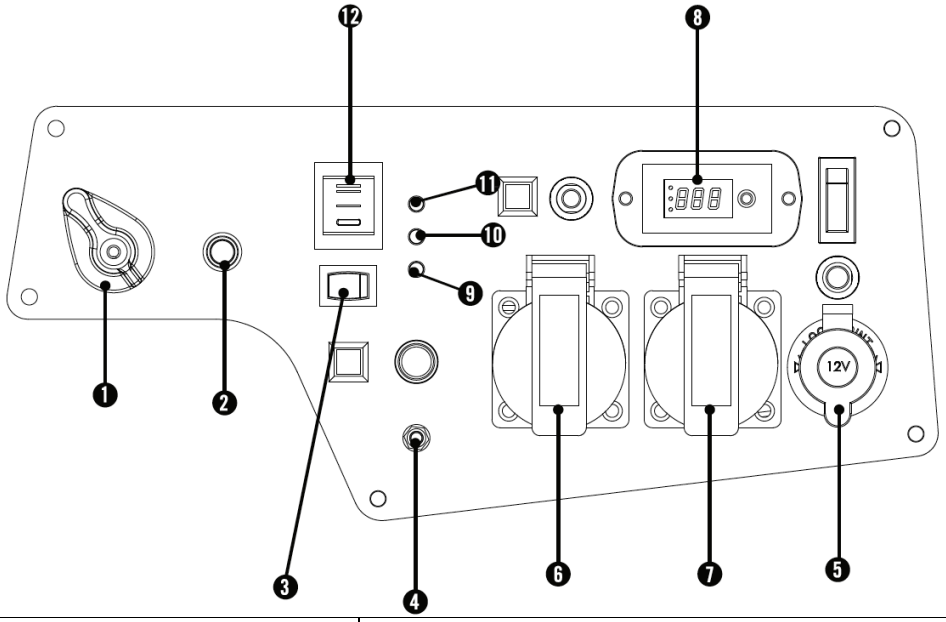

(1) Fuel tap **(2) Starter** **(3) Economy mode control switch** **Grounding** – consult an electrician for current grounding regulations. **(5) DC-12V output** **(6) Socket - 230 Volt AC 50 Hz, single phase.** **(7) Socket - 230 Volt AC 50 Hz, single-phase.** **(8) Digital multimeter 3 in 1**	**(9) Oil level indicator light** Check the oil level when this indicator light turns on. The engine does not operate if this light is on. **(10) Output Indicator Light** – this light turns on when the generator is overloaded and shuts off power to the outlets. **(11) AC light** – remains ON during normal operation. TURNS OFF when the generator is overloaded. **(12) Engine switch.**

*Warning : do not operate an appliance when it is plugged into the 12 V DC socket. Prolonged exposure to engine exhaust fumes can cause severe injury or death. During charging, do not place the unit on the generator exhaust side. Extreme heat can cause damage to the unit and a risk of fire.

4. CONTROLS AND FEATURES

Power panel load management condition	Power panel load management
This generator is equipped with a wireless remote-control system for starting and stopping. The system consists of (4) main components: 1. Control Receiver Module (CRM) 2. Wireless remote-control 3. Battery switch 4. Ignition switch The remote-control functions are activated when: 1. The ignition switch is in "ON" position, AND. 2. The battery switch is in "ON" position. The remote-control functions are activated in one of these conditions. 1-The ignition switch is set to "ON" position. 2-The battery switch is set to "ON" position. The remote-control functions are disabled in any of the following conditions. To start the generator with remote-control, press the "Start" button on the remote-control once. The engine will try to start (6) times. The MRC controls the automatic starter each time it attempts to start. To stop the generator with the remote-control, press the "STOP" button on the remote-control once. **Remote-control power consumption** When the ignition switch is in "ON" position, the MRC is active and waiting for a signal from the remote-control. This function requires electrical current from the battery. If the ignition switch is left in "ON" position for extended periods of time (several weeks), the battery may be completely discharged. Moving the ignition switch to "OFF" position disables the remote functions, but the MRC still consumes about 2 mA of the battery. To avoid draining the battery, press the battery switch to the "OFF" position. This action cuts off power to the MRC and there is no battery power consumption.	When the generator starts for the first time with the remote-control, no voltage is supplied to the power panel for about 15 seconds. This allows the engine to reach its maximum speed before electrical charges are applied to the generator. When the generator is switched off with the remote-control, the power supply to the panel is immediately switched off. Then, the engine stops after about 5 seconds when the "STOP" button is pressed on the remote-control. Turning off the power panel before the engine stops protects the connected devices from failure caused by a non-voltage of 50 Hz while waiting for the generator to stop. **The on/off voltage delay during start/stop only occurs when the remote control is used. There is no voltage delay when the electric start push button or manual start is used.** **Power panel load management condition** When using the push button or manual start, the operator must ensure that all electrical charges (devices) are switched off during start and stop. Starting or stopping the generator while the equipment is connected and turned could cause damage to the generator or connected equipment.

Your generator requires an assembly. This unit is shipped from our factory without oil. It must be supplied with oil and fuel before the operation.

Remove the generator from the packaging box

1. Install the packaging board on a solid and level surface.
2. Remove everything in the box except the generator.
3. Using the device's carrying handles, carefully remove the generator from the box. (it is recommended that the device be lifted by two people)

Connecting the battery

1. Using a screwdriver, remove the two maintenance screw covers (2) and the battery maintenance cover (A).
2. Once the screws are removed, the rubber pull on the cover can be removed to help loosen to dislodge the maintenance cover. (A)
3. Remove the maintenance cover from the battery. (A)

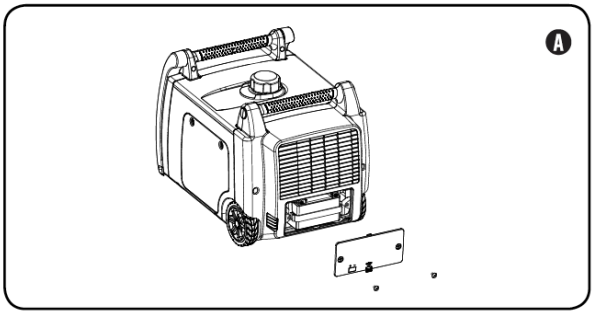

4. Cut the closure that connects the battery cables together.
5. With a screwdriver, unscrew the battery bolt in the red battery terminal on the positive (+) side.
6. Connect the red, positive (+) terminal to the wire of the positive (+) terminal of the battery using the bolt.
7. Pull the battery cable connection and battery terminal.
8. Repeat steps 5-7 to connect the black, negative (-) terminal to the negative (-) battery terminal wire.

Battery connection condition

NOTE
If the battery cables are not visible after removing the cover, please note that they would be stuck on top of the battery and not visible to the naked eye.

5. OPERATION

Generator location

NEVER operate the generator in a building, including garages, basements, toilets, hangars, enclosures or compartments, including the generator compartments of a recreational vehicle. Please check with the local authorities for additional information. In some regions, generators must be registered with the local utility. Generators used on construction sites may be subject to additional rules and regulations. Generators must always be placed on a flat and level surface (even when they are not in use). Generators must be kept approximately 5 feet (1.5 m) away from any combustible material. In addition to separation from combustible materials, generators must also have at least 3 feet (91.4 cm) between all sides to allow for proper cooling, maintenance, and service. Generators must never be started or switched on behind SUVs, motorhomes, trailers, trucks (or otherwise), under stairs, close to walls or buildings, or in any other place that does not allow adequate cooling. DO NOT block the generators during operation. Allow generators to cool properly before transport or storage. Place the generator in a well-ventilated area. DO NOT place the generator near air vents or intakes as exhaust fumes may enter occupied or confined spaces. Carefully examine the wind and air currents before positioning the generator.

Failure to comply with appropriate safety measures could void the manufacturer's warranty.

WARNING
Also avoid using the generator when your hands are wet as this could cause an electric shock.
Do not use or store the generator in rain, snow, or wet areas or near a swimming pool or watering system.

WARNING
During operation, the muffler and smoke exhaust produce heat. If adequate cooling and breathing space is not provided, or if the generator is blocked or contained, temperatures could become extremely hot and cause a fire.

Grounding

The generator grounding system connects the frame to the ground terminals of the power panel.

- The generator (stator winding) is isolated from the frame and ground pin of the AC power socket.
- Electrical appliances requiring a grounding pin connection do not work if the grounding pin is not operational unless the neutral is connected to the frame.

Starting with the remote-control

Starting with the remote-control is only possible at **80 feet** from the generator. (The wireless signal cannot pass through some solid objects.)

Do not attempt to adjust the carburettor starter. The electrical system and remote-control close and automatically open the starter.

1. Check that the generator is on a flat surface.
2. Turn off all electrical charges connected to the generator. Never start or stop the generator if electrical appliances are connected and switched on.
3. Turn the fuel valve to the "ON" position.
4. Set the battery switch to "ON".
5. Set the ignition switch to "ON".
6. STARTING WITH THE REMOTE-CONTROL: Press the "Start" button on the remote-control briefly. Do not hold the button down, press it only once. The engine will try to start six times.
7. A safety device is provided to delay the availability of electrical energy during the start mode. The delay lasts about 15 seconds.

The delay is intended to avoid damage to the generator if the electrical loads are inadvertently activated when the engine is started.

8. If the generator does not start, check the battery status, and cable connections.

NOTE

The 12V 7AH battery supplied must be charged when the engine is running. However, fully charging the battery at least once a month is advisable.

NOTE

When the battery switch is in "ON" position, the switch flashes if the battery is charging. If the switch does not flash in the "ON" position, make sure that the battery connection is suitable.

Starter and electric start

1. Make sure the generator is on a flat and level surface.
2. Disconnect all electrical charges from the generator. Never start or stop the generator with electrical equipment connected or switched on.
3. Turn the fuel valve to the "On" position.

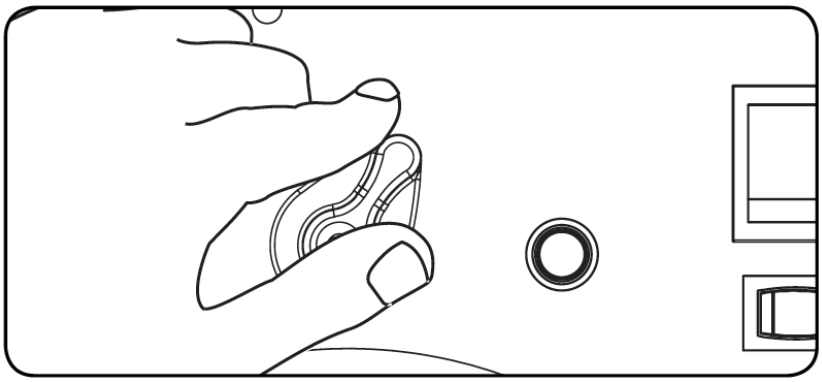

4. Turn the battery switch to the "ON" position.

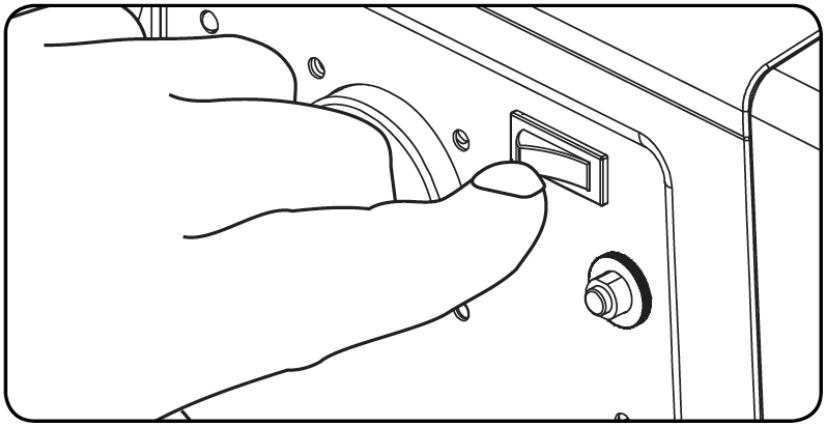

5. Push the starter button to the "STARTER" position.

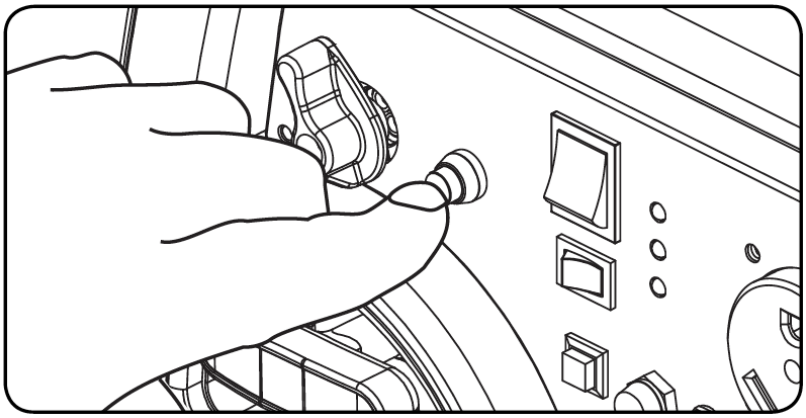

6. Set the engine switch to the "ON" position.



7. ELECTRICAL START: Press and hold the ignition switch to the "START" position.
Release when the unit starts running. If the engine does not start after five seconds, release the switch and wait at least two seconds before attempting to start again.
8. STARTING THE LAUNCHER: Pull the launcher slightly until you feel resistance and then pull quickly.
9. When the engine warms up, push the starter button to the "On" position.

NOTE
Hold the starter button in position only for manual starting. Afterwards, push the starter button to the "on" (left) position for the next 3 attempts.
Several starts drain the spark plug/engine due to lack of air. This situation will prevent the engine from starting.

NOTE
If the engine starts but then stops, make sure the generator is placed on a flat, level surface. The engine is equipped with an oil sensor which prevents it from running when the oil level is below the critical level.

Manual Start

If the battery is empty or cannot produce enough current use the launcher to manually operate the engine.

To manually start the engine and start the inverter, please follow the steps below:

1. Loosen the screws and remove the protective cover. (A)

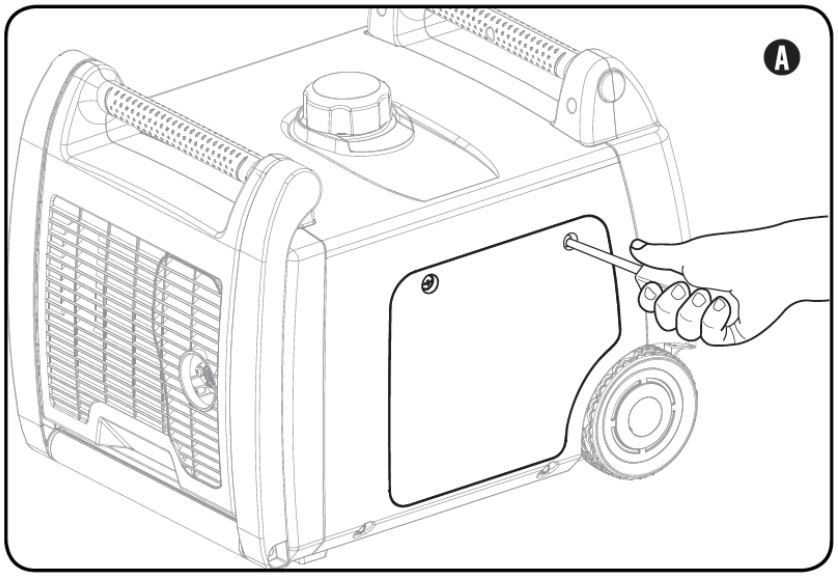

2. Locate the yellow manual starter lever (B)
3. Turn the starter lever to position B "START".

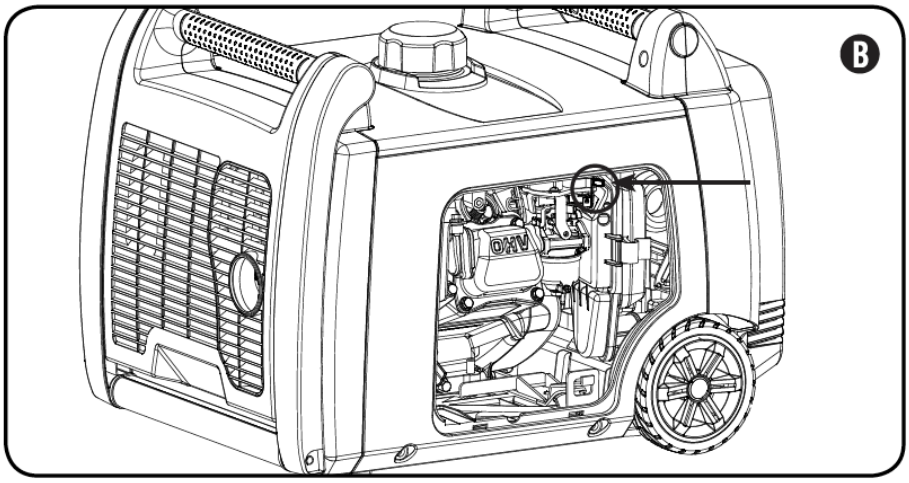

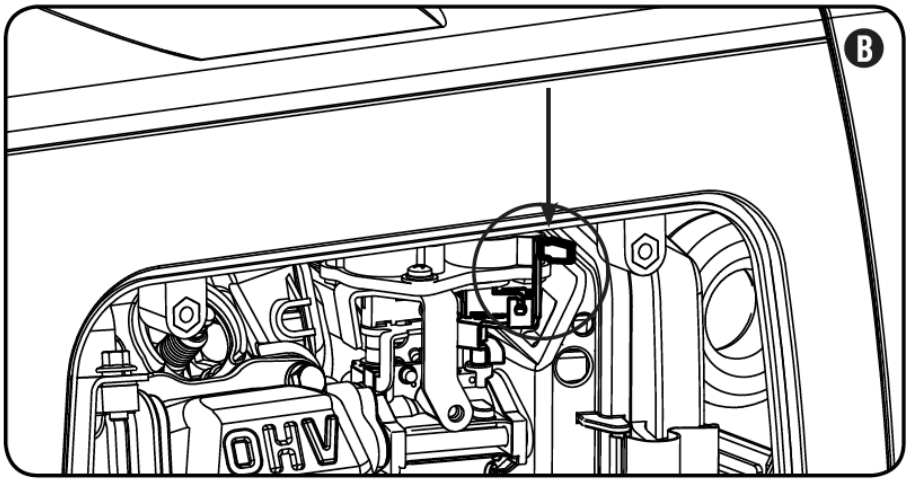

4. Turn the fuel valve to the "ON" position.
5. Turn the engine switch to the "ON" position
6. Pull the launcher handle until you feel resistance and pull hard
7. When the engine starts running, push the starter lever to the "On" (left) position.

NOTE

Keep the starter lever in the "STARTER" (right) position for manual starting only.

Afterwards, push the starter lever to the "on" (left) position for the next 3 attempts. Several starts drain the spark plug/engine due to lack of air. This situation will prevent the engine from starting.

Power Control Switch

The power control switch could be activated to reduce fuel consumption and noise during the unit operation in the event of **reduced power supply,** allowing the engine to idle during periods of non-use. The engine speed returns to normal when an electrical charge is connected. When the economy mode is deactivated, the engine runs constantly at normal speed.



WARNING

During periods of high electrical load or momentary fluctuations, the electrical control switch must be turned off.

Connecting electrical charges

Allow the engine to stabilize and warm up for a few minutes after starting.
Connect and turn on the desired 230 Volt AC single phase, 50 Hz electrical charges.
DO NOT connect 3-phase charges to the generator.
DO NOT connect 60 Hz charges to the generator.
DO NOT overload the generator.

NOTE

Connecting a generator for the power lines of your electrical installation or to another energy source may be against the law. In addition to this action, if the connection is not made properly, it could damage your generator and appliances or even cause severe injury or even death to you and someone working on nearby power lines. If you plan to operate the portable power generator in the event of a failure, please inform your utility immediately and connect your devices directly to the generator. Do not connect the generator to an electrical outlet in your home. This could create a connection with the electricity company's power lines. It is your responsibility to ensure that the electricity from your generator is not fed back into the power lines. If the generator is to be connected to a house electrical system, consult your local electricity company or a qualified electrician. Connections must isolate the generator power from the mains supply and comply with all applicable laws and regulations.

12-volt dc output

The 12-volt DC output could be used with the supplied cable charging cable and USB charger as well as other available 12V DC plug of different versions.
Any unregulated DC output could damage some products. Check that the input voltage range of the accessory is at least 12-24V DC. When using the DC plug, set the economy mode to the "OFF" position.

WARNING

Do not operate a device while it is plugged into the 12V DC outlet.
Prolonged exposure to engine exhaust could result in injury or death

WARNING
Prolonged exposure to engine exhaust could result in severe injury or death.

12V DC output - battery charging

1. Before connecting the charging cable to a battery installed in a vehicle, disconnect the ground cable from the vehicle battery from the negative (-) of the battery terminal.
2. Connect the charging cable to the 12V DC plug of the generator.
3. Connect the red wire (+) of the battery charger to the red wire (+) of the battery terminal.
4. Connect the black wire (-) of the charger to the battery (-) on the black terminal (-) of the battery
5 - Start the generator.

Important: The 12V DC output should only be used with the supplied 12V DC battery charging cable. The 12V DC output is unregulated and could damage other 12V DC products. When using the 12V DC output, set the economy mode switch to the "OFF" position.

CAUTION
Do not start the unit when the battery charging cable is connected and the generator is running. The battery will not be powered.
The unit or generator may be damaged. Charge only lead-acid batteries. Other types of batteries could burst and cause injury or damage.

NOTE
Make sure that all electrical devices, including lines and connectors are in good condition before connecting to the generator.

Engine shutdown

1. Switch off and disconnect all electrical charges.
Never start or stop the generator if electrical appliances are connected or switched on.
2. Let the generator run without charge for several minutes to stabilize the internal temperatures of the engine and generator.
3. Turn the fuel valve to the "OFF" position.
4. Leave the engine running until it stops when it runs out of fuel. This usually takes a few minutes.
5. Turn the engine switch to the "OFF" position.
6. Set the battery switch to the "OFF" position if needed.
Important: Always make sure the fuel valve and engine and battery switch are set to the "OFF" position when the engine is not in use.

Engine shutdown condition

NOTE
If the engine will not be used for more than two weeks or more, please refer to the storage section for information on proper storage and fuel.

NOTE
Always set the battery switch to the "OFF" position when the device is not in use, this prevents the battery from discharging. Please follow the storage and maintenance instructions for the generator and battery when the unit is not to be used for 2 weeks or more.

DO NOT OVERLOAD THE GENERATOR
Capacity

Please follow the simple steps below to calculate the operating and starting watts required for the different needs:
1 - Select the electrical devices you wish to use at the same time.
2 - Calculate the total wattage of these items.
This is the amount of power needed to keep your appliances running.
3-Identify the highest starting wattage for all devices identified in step 1. Add this number to the number calculated in step 2. Overvoltage power is the additional burst of power required to start certain electrical devices. Following the steps in "Power Management" ensures that only one device starts at a time.

Power management
Use the following formula to convert voltage and amperage to watts:
Volts x Amps = Watts
To extend the life of your generator and related equipment, follow these steps to add electrical charges:
1. Start the generator without any electrical charge.
2. Let the engine run for several minutes to stabilize.
3. Connect and add the first element. Connecting the device with the highest load first is preferable.
4. Let the engine stabilize.
5. Connect and add the following element.
6. Let the engine stabilize.
7. Repeat steps 5-6 for each additional item

NOTE
Never exceed the capacity specified when adding charges to the generator.

Overload operation
The overload indicator lights up when the nominal load is exceeded. When the nominal load is exceeded, the LED flashes and cuts off power to the receptacles. To get the power back on, stop the engine, wait for the light to turn off and start the generator again.

WARNING
Failure to operate the generator in accordance with the prescribed instructions could result in damage to the unit. The standard main nozzle must be used to operate the unit at low elevations. Operating the engine with the wrong configuration at high altitude could increase emissions and reduce fuel efficiency and performance.

Starting the engine (continued)

6. Gently pull the starter rope until you feel resistance, then pull it quickly.
7. When the engine heats up, push the starter lever to the "On" position.

NOTE
Keep the starter lever in the "Starter" position the first time the recoil starter is pulled, then move the starter lever to the "Run" position for the next 3 times. Too much throttling creates a clogged spark plug or a flooded engine due to lack of air intake. The engine does not start.

NOTE
If the engine starts but does not run, check that the generator is on a level surface. The engine is equipped with a low oil level sensor that prevents it from running below a critical threshold.

Economy mode control switch

The economy mode control switch can be activated to minimize fuel consumption and reduce unit noise in the event of **restriction of electric current,** , allowing engine speed to idle when not in use. The engine speed returns to normal when an electrical charge is connected. When this switch is in OFF mode, the engine runs at high speed.

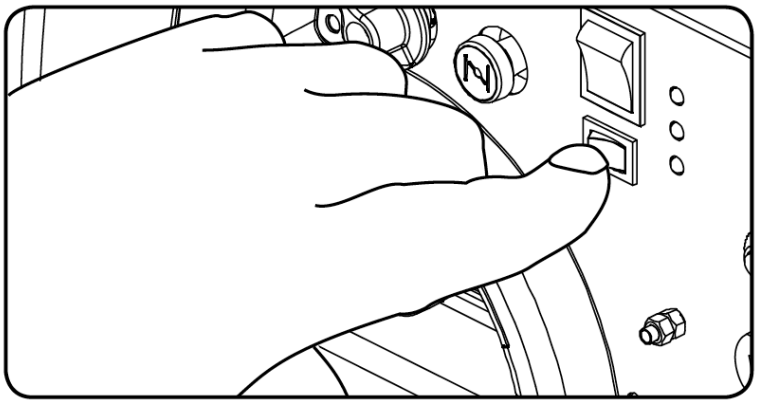

CAUTION
During periods of high electrical load or momentary fluctuation, the economy control switch should be placed in the OFF position.

Connecting electrical loads
1. Allow the engine to stabilize and warm up for a few minutes after starting.
2. Plug in and turn on the desired 230 V AC single-phase 50 Hz electrical outlets.
- DO NOT connect three-phase loads to the generator.
- DO NOT connect 60 Hz loads to the generator.
- DO NOT overload the generator.

NOTE
Connecting the generator to your electricity supplier's high-voltage lines or other energy sources may be against the law. In addition, this action, if improperly performed, could damage the generator and appliances and cause serious or even fatal injuries to you or the electricity supplier's employees who may work on nearby power lines. If you plan to run the portable power generator in the event of a power failure, please notify your electricity supplier immediately and remember to plug your appliances directly into the generator. Do not plug the generator into any electrical outlet in your home. This could create a connection to the electricity supplier's high voltage lines. You are responsible for ensuring that your power generator is not included in the utility power supply lines. If the generator is connected to a reinforcement of the electrical system, consult your local electricity supplier or a qualified electrician. The connections must isolate the power of the mains generator and comply with all laws and standards.

CAUTION
Do not operate an appliance while it is plugged into the 12 V DC outlet.
Extended exposure to engine exhaust gas can cause severe injury or death.

CAUTION
When charging a device, do not place anything next to the exhaust of the generator.
Extreme heat from the exhaust can damage the device and cause a fire hazard.

12 V CC plug
The 12V DC plug can be used with the USB charger and charging cable provided and other 12V CC automotive style plugs available on the market. The 12 V DC plug is not regulated and may damage some

products. Make sure that the input voltage difference of the accessory is at least 12 to 21 V CC. When using the DC outlet, turn the economy mode switch to the "OFF" position.

CAUTION
Do not start the unit when the battery charging cable is connected and the generator is running. This will not give the battery extra power. The unit or generator may be damaged. Charge only ventilated lead-acid batteries. Other types of batteries can explode and cause injury or damage.

NOTE
Make sure that all electrical equipment, including lines and connectors, are in good condition before connecting to the generator.

12 V DC socket - battery charging
1. Before connecting the battery charging cable to a battery installed in a vehicle, disconnect the cable from the vehicle battery. From the negative (-) terminal.
2. Plug the battery charging cable into the CC socket of the generator.
3. Connect the red battery charging wire (+) to the red battery terminal (+).
4. Connect the black battery charging wire (-) to the black battery terminal (-).
5. 5 - Start the generator.
Important: the 12 V CC socket must be used ONLY with the supplied 12 V CC battery charging cable. The 12 V CC plug is not regulated and will damage other 12 V CC products. When using the 12 V CC socket, turn the economy mode switch to the "OFF" position. Make sure that all electrical appliances including in-line and plugged connections are in good condition before connecting them to the generator.

NOTE
If the engine will not be used for a period of two (2) weeks or more, refer to the Storage section for proper engine and fuel storage.

To stop the engine
1. Switch off and disconnect all electrical charges. Do not start or stop the generator if electrical appliances are connected or switched on.
2. Let the generator run without charge for several minutes to stabilize the internal temperatures of the engine and generator.
3. Turn the fuel valve to "OFF" (closure)
4. Let the engine run until the fuel has been fully used in the fuel line and carburettor and the engine stops when the fuel runs out. This usually takes a few minutes.
5. Turn the starting switch to "Off". (shutdown).
6. Turn the air intake lever for fuel to the "Off" position.

Important: Always ensure that the fuel valve and the engine and ignition switch are in the "OFF" position when the engine is not in use.

Do not overload the generator
Capacity
Follow these simple steps to calculate the operating and starting power for the different applications.
1. Select the electrical devices you plan to operate simultaneously.
2. Calculate the total number of watts required to operate these devices. The figure obtained corresponds to the power required to supply these items.
3. Determine the highest starting power among all the devices identified in step 1. Add this number to the number calculated in step. 2. Overvoltage power is the number of additional watts required to start

certain electrical appliances. The steps under "Power management" ensure that only one device is started at a time.

Power management

Use the following formula to convert voltage and amperage to power:

Volts x amperes = watts

To extend the useful life of the generator and the appliances connected to it, follow these steps to add electrical loads:

1. Start the generator without any electrical charge.
2. Let the engine run for several minutes to stabilize.
3. Connect the first appliance and switch it on. Connecting the device with the highest load first is preferable.
4. Let the engine stabilize.
5. Plug in the next device and turn it on.
6. Let the engine stabilize.
7. Repeat steps 5 to 6 for any additional devices.

NOTE
Never exceed the capacity of the generator by adding loads.

Overload operation

The overload indicator lights up when the nominal load is exceeded. When the maximum charge is reached, the light blinks and the power turns off after a short period of time. To power again, turn off the engine, wait until the overload light turns off and restart the generator.

The owner or user is required to perform any periodic maintenance.

CAUTION
Never operate a damaged or defective generator.

CAUTION
Changing the factory-set controller voids the warranty.

CAUTION
Improper maintenance voids the warranty.

NOTE
Maintenance, replacement or repair of emission control devices and systems can be carried out by an off-road engine repairer or company.

Perform all planned maintenance procedures on time. Correct any problems before operating the generator.

NOTE
For assistance with service or spare parts.

Engine maintenance

To prevent accidental starting, remove the contact wire from the spark plug before performing maintenance.

Oil

Change the oil when the engine is hot. Refer to the oil specifications to select the right type of oil for your working conditions.

1. Place the generator on a work bench or table.
2. Loosen the cover screw and remove the maintenance cover.
3. Remove the maintenance rubber plug from underneath the drain screw.
4. Remove the 12 mm drain bolt.
5. Allow the oil to drain completely.
6. Add 0.6 L (o.6 quart) of oil and replace the oil tank cap/dipstick. DO NOT FILL IN.

NOTE

Once the oil has been added, make a visual check to ensure that there are one or two screw threads before it reaches the filler hole. If you use the dipstick to check the oil level, DO NOT screw in the dipstick cap.

7. Re-install the cover for maintenance and tighten the cover screw.
8. Dispose of used oil in an approved waste management centre.

Spark plug

1. Remove the cover for maintenance.
2. Remove the spark plug wire.
3. Use the spark plug tool supplied with the generator to remove the spark plug.
4. Remove the spark plug.
5. Check the spark plug electrode. It must be clean and unused to produce the spark required for ignition.
6. Check that the spark plug gap is 0.7 to 0.8 mm (0.028 to 0.031 in.).
7. Carefully screw the spark plug into the engine.
8. Use the spark plug tool to secure the spark plug.
9. Put the spark plug wire back on the spark plug.
10. Re-install the spark plug maintenance cover.

6. MAINTENANCE AND STORAGE

Air filter

1. Remove the cover for maintenance.
2. Locate the plastic cover of the air filter.
3. Unscrew the locking hinge on the cover.
4. Remove the old filter.
5. Place the new filter in the assembly.
6. Re-engage the hinge on the air filter cover.
7. Re-install the cover for maintenance and tighten the cover screw.

Cleaning

CAUTION
DO NOT spray water on the engine.
Water can contaminate the fuel system.

Use a damp cloth to clean the outer surfaces of the engine. Remove dirt and oil with a soft bristle brush.
Use an air compressor (1724 hPA/25 psi) to remove dust and debris from the engine.

Spark arrestor

1. Allow the engine to cool completely before any spark arrester maintenance procedure.
2. Remove the (2) fixing screws from the cover plate holding the end of the spark arrester on the muffler.
3. Remove the grid from the spark arrester.
4. Carefully remove carbon deposits from the spark arrester grid with a wire brush.
5. Replace the spark arrester if it has been damaged.
6. Replace the spark arrester in the muffler and secure it with the three screws.

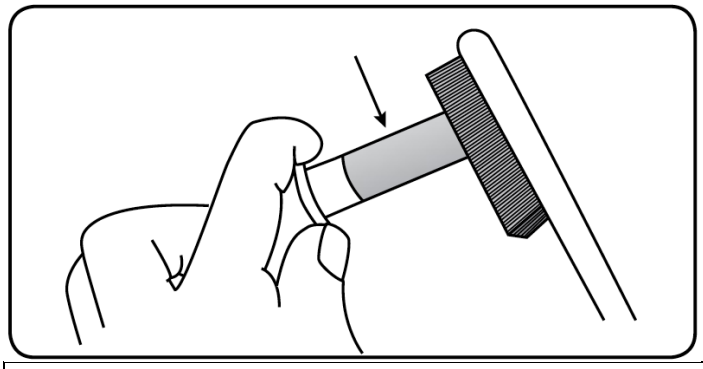

CAUTION
Failure to clean the spark arrester reduces the engine performance.

Adjustments

The air-fuel mixture is not adjustable. Tampering the controller may damage your generator and electrical equipment and voids the warranty.

Maintenance schedule

Observe the maintenance intervals indicated in the schedule below. Service the generator more frequently when it is operating in harsh conditions.

Every 8 hours or daily	
	Check the oil level.
	Clean around the air intake and silencer
Within the first 5 hours	
	Change the oil
	Change the oil when used with heavy loads or in a hot environment
Every 100 hours or every season	
	Change the oil
	Clean or adjust spark plug gap
	Check or adjust the valve clearance*
	Clean the spark arrestor
	Clean the fuel tank and filter*
Every 250 hours	
	Clean the combustion chamber*
Every 3 years	
	Change the fuel hoses

* To be performed by experienced or well-informed owners or authorised repairers.

Maintenance of the generator

Keep the generator clean and store it properly. Operate the unit only on a flat, level surface in a clean, dry environment. DO NOT expose the unit to extreme conditions or excessive dust, dirt, moisture, or corrosive fumes.

CAUTION
We DO NOT recommend using a garden hose to clean the generator.
Water can enter the generator through the ventilation vents and damage the windings.

Use a damp cloth to clean the exterior surfaces of the generator.

Remove dirt and oil with a soft bristle brush.

Use an air compressor (1724 hPA/25 psi) to remove dust and debris from the generator. Check all air vents and cooling vents to ensure they are clean and unobstructed.

Storage

The generator must be started at least once every 14 days and must operate for at least 20 minutes. For long-term storage, please follow these instructions.

Storage of the generator

1. Add the properly formulated stabilizer additive to the tank.
2. Make sure that all appliances are disconnected from the generator.
3. Run the generator for a few minutes to allow the treated fuel to flow through the fuel lines and carburettor.
4. Turn the fuel valve to the “OFF” position.
5. Let the generator run until the engine stops when it runs out of fuel. This usually takes a few minutes.
6. The generator must cool completely before any cleaning or storage.
7. Remove the spark plug cap, then pull the launcher handle 3 times to drain the fuel from the nozzles.
8. Change the engine oil.
9. Remove the spark plug and pour about a tablespoon of oil into the cylinder. Run the engine slowly to distribute the oil and lubricate the cylinder.
10. Replace the spark plug.

11. Store the unit in a clean, dry place, away from direct sunlight.

DANGER
The generator exhaust contains carbon monoxide, an odourless and colourless gas.
To avoid accidental or unintentional contact with the starter motor of the generator while it is stored, observe the following precautions:
- **When storing the generator for short periods of time,** make sure that the ignition switch and fuel valve are in the **OFF** position.

7. TECHNICAL FEATURES

Engine features
Type ... four-stroke overhead valve engine
-Starter type... launcher and electric starter
-Rated power 4.2kW/3800/min
-Maximum power ... 4,4kW
-Capacity ...192 cm^3
-Fuel capacity ... 6L
-Guaranteed sound power level: 96 dB(A)
-Sound power level measured at 4m :
LpA=82.64 dB (A)
LwA = 98.98 dB (A)
K = 2.5 dB (A)
-Noise level (measured at 7 m) 58dB(A)

Generator features
-AC Voltage....230V~
Frequency: 50Hz
-Nominal power..(COP) 3.1kW
-Maximum power..3.3 kW (S2:5min)
-Nominal current AC..13.5A
-DC output power...12V/6.5A
-Power factor ..1.0
-Protective classIP23M
-Maximum altitude..1000m
-Net weight ...43 kg
-Height..46,4 cm
-Width...44 cm
-Length...63,7cm

Fuel
The fuel capacity is 6 L (1,6 gal.).
Use regular unleaded fuel with a minimum octane rating of 85 and an ethanol content of less than 10% by volume.

Oil
Use 10W-30 engine oil.
Oil capacity is 0.6L (0.6 quart).
DO NOT FILL IN.
Please refer to the table below for the recommended oil types for the generator.

NOTE
Temperature will affect engine oil and engine performance. Change the type of engine oil used according to weather conditions to meet the engine's needs.

Spark plugs
Manufacturer's spark plugs: NHSP F6RTC
Replacement spark plugs: NGK BPR6ES or equivalent
or equivalent
Check that the spark plug gap is 0.7 to 0.8 mm (0.028 to 0.031 in.).

Valve clearance
-Inlet 0.06 to 0.12 mm (0.002 to 0.005 in)
-Exhaust 0.08 to 0.14 mm (0.003 to 0,006 inch)

Important temperature message
Your Hyunday product is designed and calibrated to operate continuously at room temperature up to 40ºC (104ºF) your product can operate at temperatures ranging from -15ºC (5ºF) to 50ºC (122ºF) for short periods of time. If the product is exposed to temperatures exceeding these limits during storage, it must be brought within these ranges before use. In all cases, the product should always be used outdoors, in a well-ventilated area away from vents, windows and other vents.

8. WIRING DIAGRAM

Diagramme de câblage

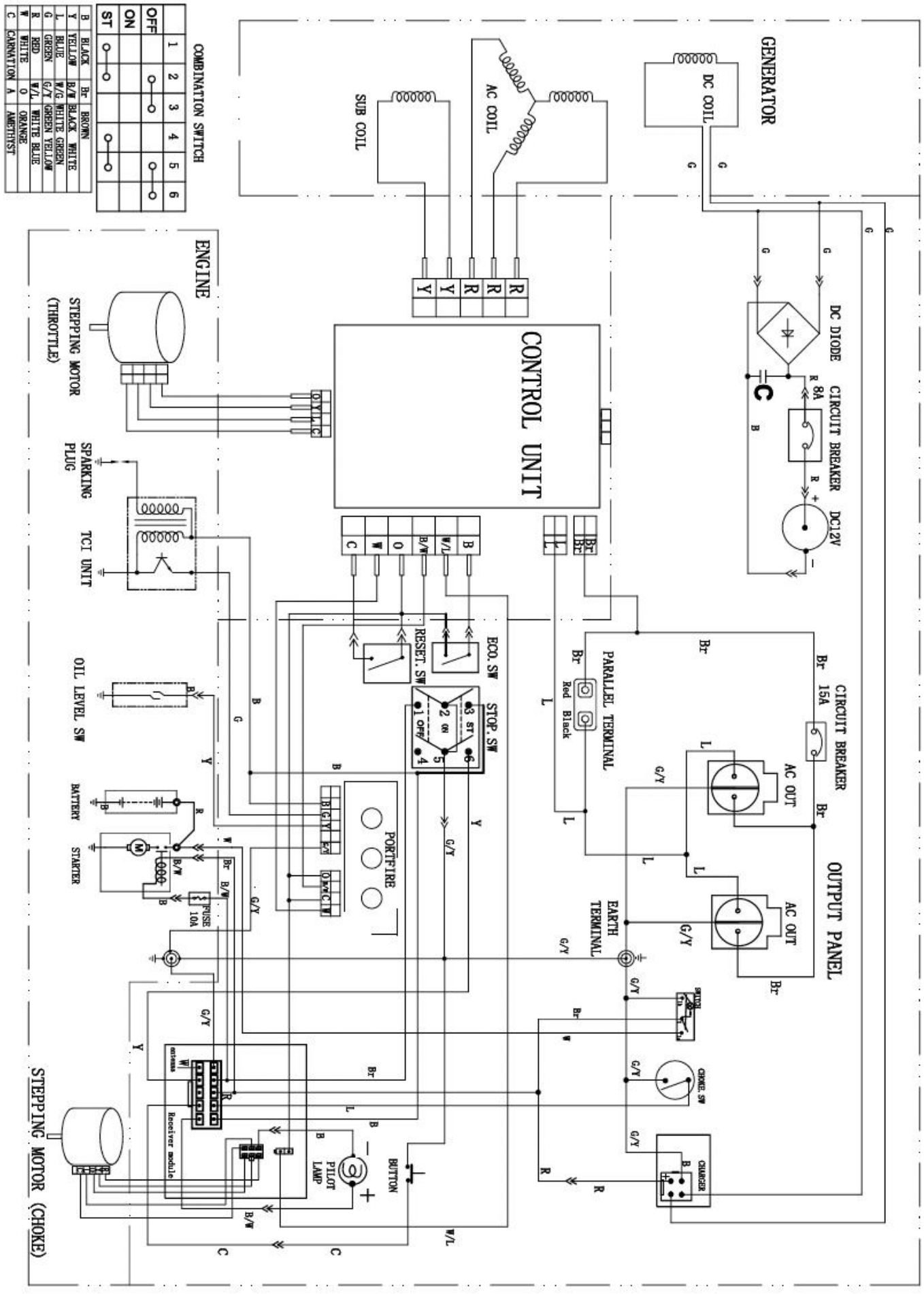

9. TROUBLE SHOOTING

Problem	Cause	Solution
The generator does not start	No fuel	Add fuel
	Faulty spark plug	Change the spark plug
	Unit charged during start-up	Remove the charge from the unit
Generator refuses to start; generator starts, but runs poorly	Low oil level	Fill the crankcase to the proper level. Place the generator on a flat and level surface
	Starter in wrong position	Adjust the starter
	Spark plug wire not connected	Fix the wire to the spark plug
The generator shuts down during operation	Lack of fuel	Fill the fuel tank
	Low oil level	Fill the crankcase to the proper level. Place the generator on a flat and level surface
The generator fails to provide enough power or overheats	The generator is overloaded	Review and adjust the load. See “Power management”
	Insufficient ventilation	Check that there is no obstruction in the air intake. Go to a well-ventilated area
There is no AC output.	Faulty cable connection	Check all connections
	The connected device is defective	Replace defective device
	The circuit breaker is triggered	Reset the circuit breaker
	Loose wiring	Inspect and tighten the electrical fixtures
	Other	Use the technical support line swap
Circuit breaker repeatedly tripped	Overload	Review and adjust the load. See “Power management”
	Faulty cords or equipment	Verify if wires are damaged, stripped or frayed. Replace the defective device.

10. EC DECLARATION OF CONFORMITY

CE

Genpower Ltd
ISAAC WAY, PEMBROKE DOCK, SA72 4RW GENPOWER FRANCE SAS, 131 BOULEVARD PEREIRE, 75017, PARIS, FRANCE

declares that the machine designation:

GASOLINE INVERTER GENERATOR

HG4000I-AR1

Serial number: 20230217500-20230217919

Is in conformity with the European Directives: Machine Directive 2006/42/EC &(EU)2023/1230

This product is in conformity with the following European standards:

Directive 2000/14/EC and 2005/88/EC

EMC Directive 2014/30/EU

This product is also in conformity with the following standards:

EN ISO8528-13: 2016
EN 60204-1: 2006/AC:2010
EN 55012: 2007+A1: 2009

Name and address of the noise measuring laboratory:

ISET S.r.l. Unipersonale

Sede Legale e Uffici

Via Donatori di sangue, 9 - 46024 Moglia (MN)

Tel. e fax +39 (0)376 598963

www.iset-italia.eu iset@iset-italia.com

Responsible of the Technical file: Mark.Z
Done at Pembrokeshire：13/10/2026

R J Llewellin

Name of QC manager: Roland Llewellin

11. WARRANTY

HYUNDAI

WARRANTY

The manufacturer guarantees the product against defects in material and workmanship for a period of 2 years from the date of the original purchase. The warranty only applies if the product is for household use. The warranty does not cover breakdowns due to normal wear and tear.

The manufacturer agrees to replace parts identified as defective by the designated distributor. The manufacturer does not accept responsibility for the replacement of the machine, in whole or in part , and/or ensuing damage.

The warranty does not cover breakdowns due to:

- insufficient maintenance.
- abnormal assembly, adjustment or operations of the product.
- parts subject to normal wear and tear.

The warranty does not extend to:

- shipping and packaging costs.
- using the tool for a purpose other than that for which it was designed.
- the use and maintenance of the machine done in a manner not described in the user manual.

Due to our policy of continuous product improvement, we reserve the right to alter or change specifications without notice. Consequently, the product may be different from the information contained therein, but a modification will be undertaken without notice if it is recognized as an improvement of the preceding characteristic.

READ THE MANUAL CAREFULLY BEFORE USING THE MACHINE.

When ordering spare parts, please indicate the part number or code, you can find this in the spare parts list in this manual. Keep the purchase receipt; without it, the warranty is invalid. To help you with your product, we invite you to contact us by phone or via our website:

- **+33 (0)9.70.75.30.30**
- **https://services.swap-europe.com/contact**

You must create a "ticket" via the web platform.

- Register or create your account.
- Indicate the reference of the tool.
- Choose the subject of your request.
- Describe your problem.
- Attach these files: invoice or sales receipt, photo of the identification plate (serial number), photo of the part you need (for example: pins on the transformer plug which are broken).

SFBL
SWAP FOR BEST LIFE

12. PRODUCT FAILURE

WHAT TO DO IF MY MACHINE BREAKS DOWN?

If you bought your product in a store:

a) Empty the fuel tank if your product has one.

b) Make sure that your machine is complete with all accessories supplied, and clean! If this is not the case, the repairer will refuse the machine.

Go to the store with the complete machine and with the receipt or invoice.

If you bought your product on a website:

a) Empty the fuel tank if your product has one..

b) Make sure that your machine is complete with all accessories supplied, and clean! If this is not the case, the repairer will refuse the machine.

c) Create a SWAP-Europe service ticket on the site: https://services.swap-europe.com When making the request on SWAP-Europe, you must attach the invoice and the photo of the nameplate (serial number).

d) Contact the repair station to make sure it is available before dropping off the machine.

Go to the repair station with the complete machine packed, accompanied by the purchase invoice and the station support sheet downloadable after the service request is completed on the SWAP-Europe site

For machines with engine failure from manufacturers BRIGGS & STRATTON, HONDA and RATO, please refer to the following instructions.

Repairs will be done by approved engine manufacturers of these manufacturers, see their site:

- http://www.briggsandstratton.com/eu/fr
- http://www.honda-engines-eu.com/fr/service-network-page;jsessionid=5EE8456CF39CD572AA2AEEDFD290CDAE
- https://www.rato-europe.com/it/service-network

Please keep your original packaging to allow for after-sales service returns or pack your machine with a similar cardboard box of the same dimensions.

For any question concerning our after-sales service you can make a request on our website https://services.swap-europe.com

Our hotline remains available at +33 (9) 70 75 30 30.

SFBL
SWAP FOR BEST LIFE

13. WARRANTY EXCLUSIONS

THE WARRANTY DOES NOT COVER:

- Start-up and setting up of the product.
- Damage resulting from normal wear and tear of the product.
- Damage resulting from improper use of the product.
- Damage resulting from assembly or start-up not in accordance with the user manual.
- Breakdowns related to carburetion beyond 90 days and fouling of carburetors.
- Periodic and standard maintenance events.
- Actions of modification and dismantling that directly void the warranty.
- Products whose original authentication marking (brand, serial number) has been degraded, altered or withdrawn.
- Replacement of consumables.
- The use of non-original parts.
- Breakage of parts following impacts or projections.
- Accessories breakdowns.
- Defects and their consequences linked to any external cause.
- Loss of components and loss due to insufficient screwing.
- Cutting components and any damage related to the loosening of parts.
- Overload or overheating.
- Poor power supply quality: faulty voltage, voltage error, etc.
- Damages resulting from the deprivation of enjoyment of the product during the time necessary for repairs and more generally the costs related to the immobilization of the product.
- The costs of a second opinion established by a third party following an estimate by a SWAP-Europe repair station
- The use of a product which would show a defect or a breakage which was not the subject of an immediate report and/or repair with the services of SWAP-Europe.
- Deterioration linked to transport and storage*.
- Launchers beyond 90 days.
- Oil, petrol, grease.
- Damages related to the use of non-compliant fuels or lubricants.

* In accordance with transport legislation, damage related to transport must be declared to carriers within 48 hours maximum after observation by registered letter with acknowledgement of receipt.

This document is a supplement to your notice, a non-exhaustive list.

Attention: all orders must be checked in the presence of the delivery person. In case of refusal by the delivery person, it you must simply refuse the delivery and notify your refusal.

Reminder: the reserves do not exclude the notification by registered letter with acknowledgement within 72 hours.

Information: Thermal devices must be wintered each season (service available on the SWAP-Europe site). Batteries must be charged before being stored.

HYUNDAI
POWER PRODUCTS

GENUINE PRODUCT OF
HYUNDAI CORPORATION

For inquiries, please contact:

GENPOWER LTD
ISAAC WAY, PEMBROKE DOCK, SA72 4RW GENPOWER FRANCE SAS, 131 BOULEVARD PEREIRE, 75017, PARIS, FRANCE
T. +33 (0)1 34 22 30 44
www.hyundaipower-fr.com
service@hyundaipower-fr.com
Fabriqué en République Populaire de Chine(PRC)

Importer by Genpower Ltd

Licensed by Hyundai Corporation Holdings,Korea